# DLM-821
## Stereo
## Ducking Line/Microphone
## Mixer

# Operating Manual

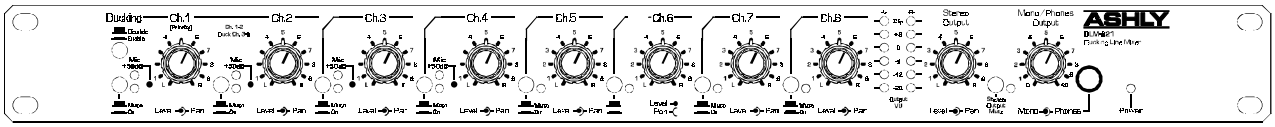



**ASHLY AUDIO INC.**

847 Holt Road  Webster, NY  14580-9103  Phone: (585) 872-0010

Toll-Free: (800) 828-6308  Fax: (585) 872-0739

www.ashly.com

# Table Of Contents

**1 INTRODUCTION** . . . . . 3

**2 UNPACKING** . . . . . 3

**3 AC POWER REQUIREMENTS** . . . . . 3

**4 SECURITY COVERS** . . . . . 3

**5 CONTROLS** . . . . . 4

**6 CONNECTIONS AND CABLES** . . . . . 6

**7 TYPICAL APPLICATIONS** . . . . . 7
7.1 Small Sound Reinforcement System . . . . . 7
7.2 Church, School Or Meeting Room Sound System . . . . . 7
7.3 Restaurant/Sports Bar System . . . . . 8

**8 TROUBLESHOOTING TIPS** . . . . . 8

**9 DIMENSIONS** . . . . . 9

**10 SPECIFICATIONS** . . . . . 9

**11 WARRANTY INFORMATION** . . . . . 10

**12 SCHEMATIC DIAGRAMS** . . . . . 11-15

## 1. INTRODUCTION

Congratulations on your purchase of an Ashly DLM-821 stereo ducking line level mixer. Features include eight balanced stereo inputs for line level sources, the first four inputs with switchable 30dB gain for low impedance microphones. +18V phantom power and stereo/mono switching is provided for inputs 1 through 4. A concentric level and pan control for each input adjusts channel volume and stereo position.

A ducking circuit allows a signal on either channel 1 or 2 to duck (attenuate) the signal on channels 3 through 8. Internally the DLM-821 can be configured for ch.1 priority whereby a signal on ch. 1 has priority over the signal on ch. 2 and fully attenuates channels 2 through 8. Furthermore, the ducking level can be configured for -20dB or -90dB, ch. 2 ducking may be disabled, and the left and right signal ducking may be disabled independently. Ultra low noise summing amplifiers combine the channel signals for the main outputs. A pair of 6-segment LED meter arrays monitor the main output levels. Separate level controls are provided for stereo, mono, and headphone outputs.

## 2. UNPACKING

As a part of our system of quality control, every Ashly product is carefully inspected before leaving the factory to ensure flawless appearance. After unpacking, please inspect for any physical damage. Save the shipping carton and all packing materials , as they were carefully designed to reduce to minimum the possibility of transportation damage should the unit again require packing and shipping. In the event that damage has occurred, immediately notify your dealer so that a written claim to cover the damages can be initiated.

The right to any claim against a public carrier can be forfeited if the carrier is not notified promptly and if the shipping carton and packing materials are not available for inspection by the carrier. Save all packing materials until the claim has been settled.

## 3. AC POWER REQUIREMENTS

The DLM-821 will perform normally from 98 to 125 volts AC. Use only properly grounded AC receptacles. To reduce the risk of ground loop hum, use a central point for system AC power distribution. The AC line fuse is internal, and should only be changed by a qualified service technician.

## 4. SECURITY COVERS

For installations where it is desirable to protect the front panel controls from tampering or accidental misadjustment, use the Ashly security cover, which is available in both single and double rack space sizes. Installation is simple and does not require removal of the equipment from your rack. See your Ashly dealer for details.

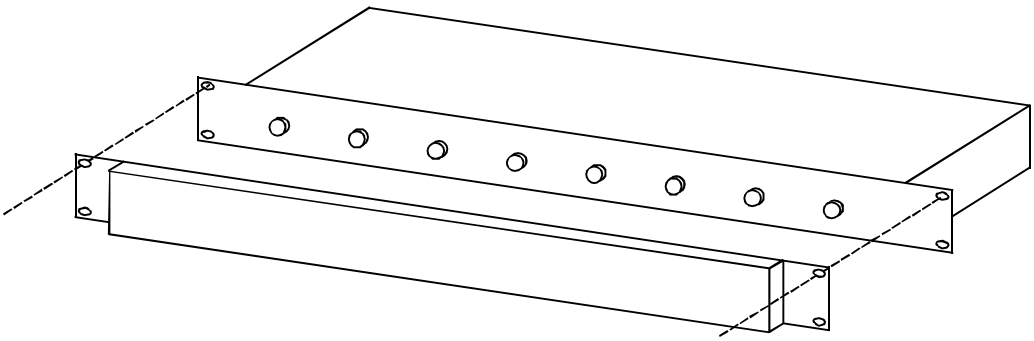

*Ashly Security Cover Installation*

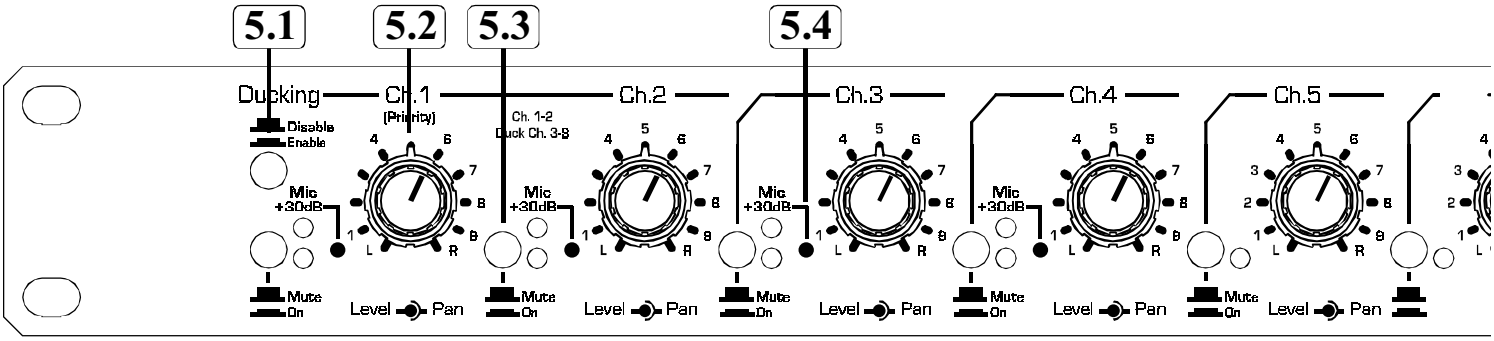


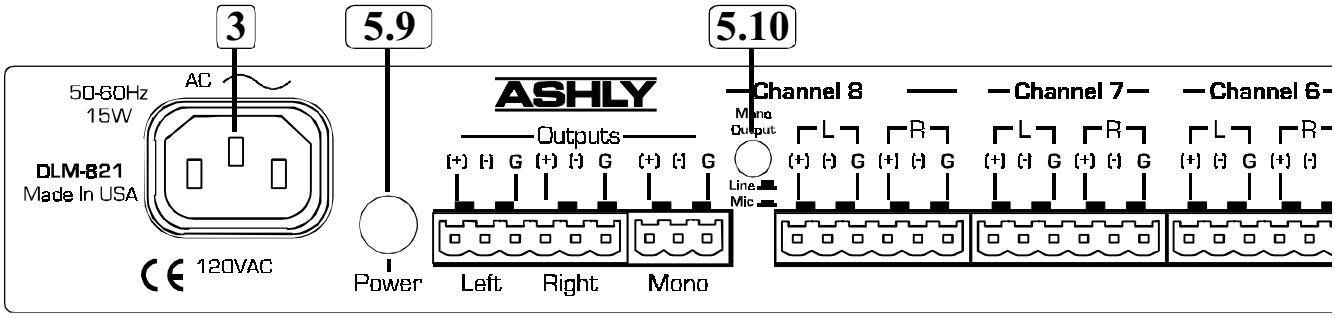


## 5. CONTROLS

### 5.1 Ducking Enable

Pressing this switch enables a signal present on inputs 1 or 2 to duck (attenuate) the signals on inputs 3 through 8. See sections 5.14 through 5.17 for internally selecting different ducking configurations.

### 5.2 Channel Level and Pan

The inner knob is the individual channel volume control which feeds a channel to the main mix. The "5" position corresponds to unity gain. The outer knob is the Pan control and adjusts the position of the channel in the stereo mix.

### 5.3 Mute Switch

This switch on each channel will turn the channel completely off allowing the channel level to remain at its desired setting when the input is not needed.

### 5.4 Mic/Line Switch

This recessed switch on the first four inputs increases the channel input sensitivity by 30 dB to allow the use of low impedance microphones. The adjacent yellow LED on indicates the switch is depressed and 30dB of gain is added for that channel's mic input.

### 5.5 Output Meters

A pair of peak detecting 6-segment LED meters are used to indicate output level. Green LED's are used below 0 VU, yellow above 0 VU, and red LED's indicate clipping. This meter pair monitors the main stereo output (0 VU = +4dBu). The red clipping LED's also monitor all input channels, making it possible for these indicators to illuminate even with the stereo output level turned off.

### 5.6 Stereo Output Level and Pan

This is the main master gain which sets the operating level for the entire mixer. The "5" position corresponds to unity gain. This control does not effect the mono output level.

### 5.7 Stereo Output Mute

This switch entirely mutes the main stereo output. The headphone and mono output are not affected. This is particularly useful when the DLM-821 is used as a sub-mixer.

### 5.8 Mono and Headphone Level

The inner knob is the master gain control for the mono output, which is the combined signal of the left and right outputs. It has no effect on the stereo output. Note: The mono output level can be selected between mic or line level. (see sec. 5.10) The outer knob is the level control for the front panel headphone jack.

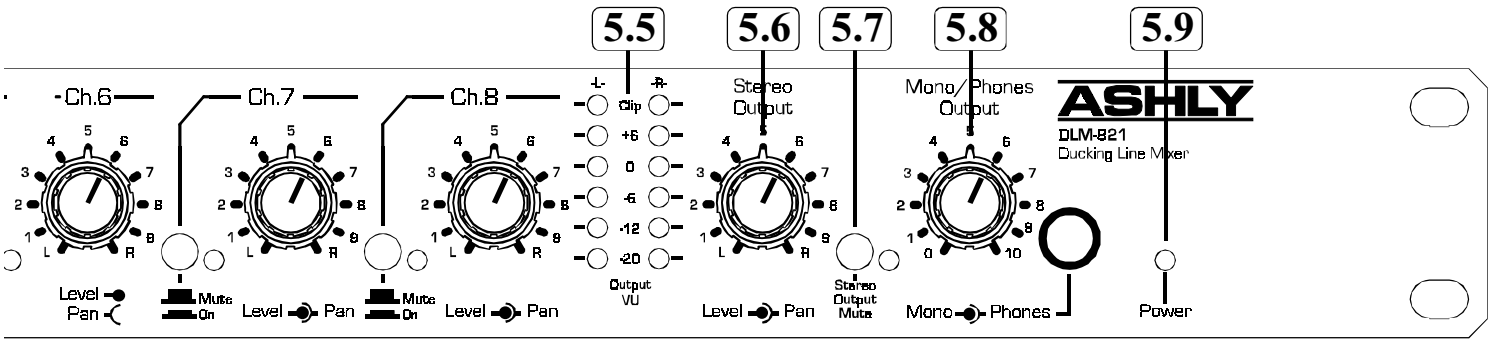


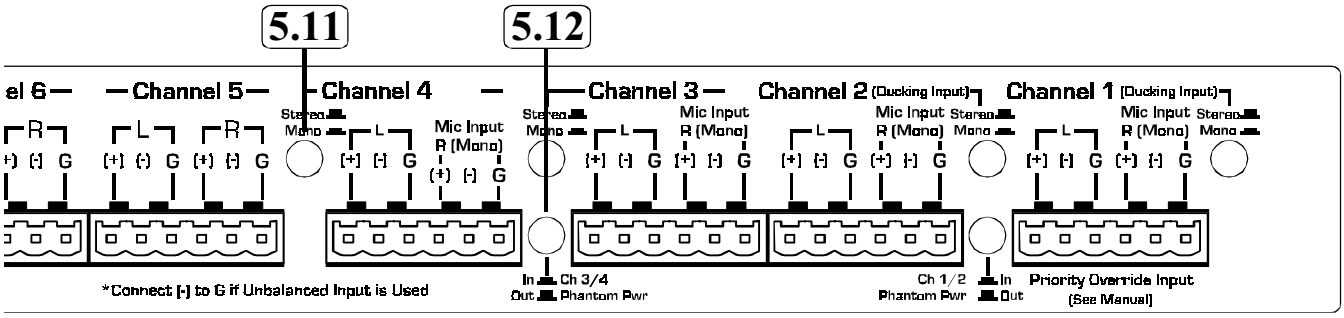


**5.9 Power Switch**

The DLM-821 power switch is on the back panel. When it is pressed in the front panel power LED will become lit.

**5.10 Mono Output Mic/Line Switch**

This switch selects between a 0dBu (out position) line level or -40dBu (in position) mic level signal feeding the Mono output connector.

**5.11 Stereo/Mono Input Switches**

These four pushbutton switches allow selection between a stereo or mono signal connection to input channels 1 through 4 respectively. In the Out position, stereo left and right cables should be connected. In the in position, a mono cable should be connected to the R(Mono) connector which then internally feeds the signal to both left and right sides.

**5.12 Phantom Power Switches**

There is a phantom power switch for channels 1 and 2 and a phantom power switch for channels 3 and 4. Pushing the switch in applies +18VDC to the (+) and (-) input terminals of the two associated channels to power condenser mics. The input channels should be muted using the On/Mute switches when switching phantom power on or off to avoid any pop noises.

**<u>Internal PCB Jumper Options:</u>**

**5.13 Ch. 2 Detect Enable ***

Internal jumper J1 allows enabling or disabling the ducker detector for ch. 2. (factory default is *enabled*)

**5.14 Ducking Level ***

Internal jumper J16 allows selection between -20dB ducking level and -90 dB ducking level. (factory default is *-20dB*)

**5.15 Ch. 1 Priority ***

Internal jumper J6 allows enabling ch. 1 to have priority over ch. 2 and fully attenuate channels 2-8. This feature is useful for applying an emergency page or alarm on channel 1 and applying a normal host page input on ch. 2. (factory default is ch.1 priority *disabled*)

**5.16 Left and Right Ducking Enable ***

Internal jumpers J14 and J15 allow the left and right signal ducking to be enabled or disabled independently. (factory default is left and right ducking *enabled*)

** For internal jumper adjustments, remove AC cord from rear of unit and refer to a qualified service technician. (see PCB jumper locations in fig. 5.2)*

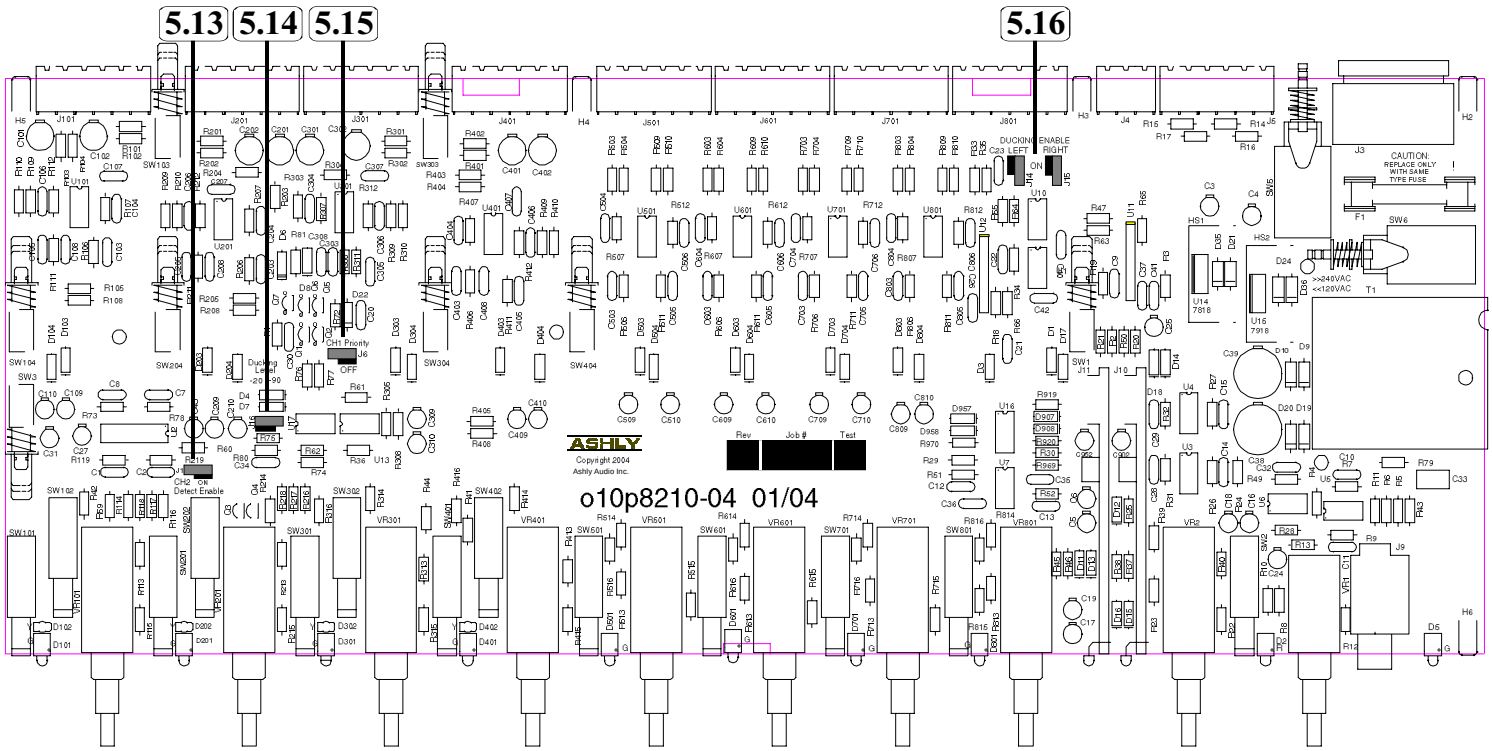


*Fig. 5.2 - DLM-821 Internal Jumper Locations*

## 6. CONNECTIONS AND CABLES

### 6.1 Inputs

The DLM-821 stereo inputs use two 20k ohm balanced (10k ohm unbalanced) Euroblock connectors per channel. Wire the (+) signal to the (+) terminal, the (-) signal to the (-) terminal, and the shield to G. If an unbalanced (two conductor) input signal is used, connect the shield to both (-) and G.

To drive a mono source into the stereo mix, simply plug the signal into the right channel input and press the Mono switch in. Additionally, channels 1 through 4 are switchable to mic level (see sec. 5.4) to add 30dB gain for microphone inputs.

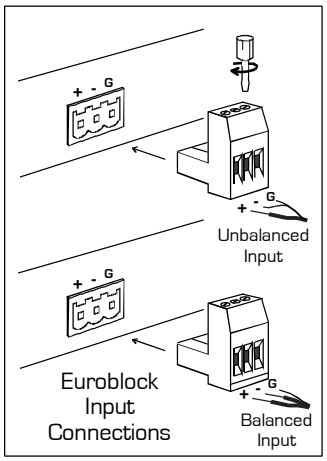


### 6.2 Main and Mono Outputs

Outputs are 200 ohm "pseudo-balanced" Euroblock connectors, which have balanced impedance with a single-ended signal source and can be wired balanced or unbalanced. Nominal operating level is +4 dBu and maximum level is +23dBu. The Mono output is switchable to a nominal -40dBu microphone level. If wiring an output as unbalanced, use the (+) and G connections.

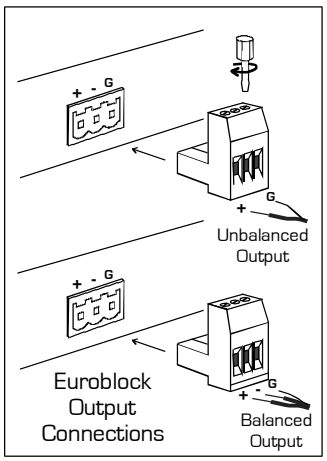


If low level and high level lines (e.g., microphones and mixer line outputs), or if either of these lines and speaker cables are run parallel for long distances, crosstalk may be significant. In fact, the crosstalk (signal leakage between cables) can cause an electronic feedback loop, oscillation, and possibly damage to the equipment. To minimize crosstalk, physically separate low level (microphone) cables from speaker cables by the greatest feasible distance. At any point where cables meet, run low level cables perpendicular to high level or speaker cables. If low and high level or speaker cables must be run parallel and in close proximity to one another, they should be bundled separately. Shielded cable should always be used for mic and line cables.

## 7. TYPICAL APPLICATIONS

### 7.1 Small Sound Reinforcement System

In the setup shown here, the DLM-821 is used to mix typical sound sources that might be found in a small club, school theater or similar environment. INPUT channels 1 & 2 are used for microphones for live vocal or instrumental pickup. INPUT channels 3-8 are used for the output of electronic music devices such as keyboards, MIDI sound modules, drum machines, etc. The power amplifier (or any additional graphic equalizers or electronic crossovers which may be used) is fed from the MAIN OUTPUT connectors.

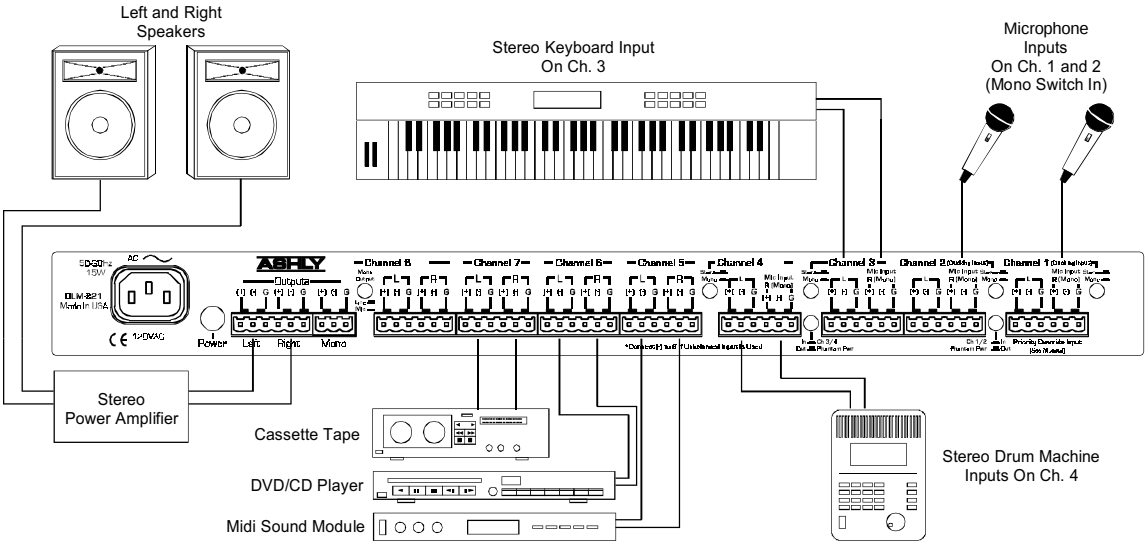


### 7.2 Church, School Or Meeting Room Sound System:

Here the DLM-821 is used to mix sources typically found in a church, classroom, or meeting room. The channel 2-4 inputs are used for microphones for live vocal or instrumental pickup. Channel 1 is fed by an alarm signal which will have priority and fully attenuate all other inputs if it is receiving an input signal. Channels 1 through 4 will have their Stereo/Mono switch pushed in. The remaining INPUT channels are used for audio outputs from video/DVD players, cassette deck, CD player, computer sound card, etc. One input channel is reserved as a spare. The power amplifier (or any additional equalizer or electronic crossover which may be used) is fed from the MAIN OUTPUT connectors. The Mono output is connected into the wall mic jack to feed the mix into the building's main PA system. Here the Mono Output selector switch should be pushed in for a mic-level signal.

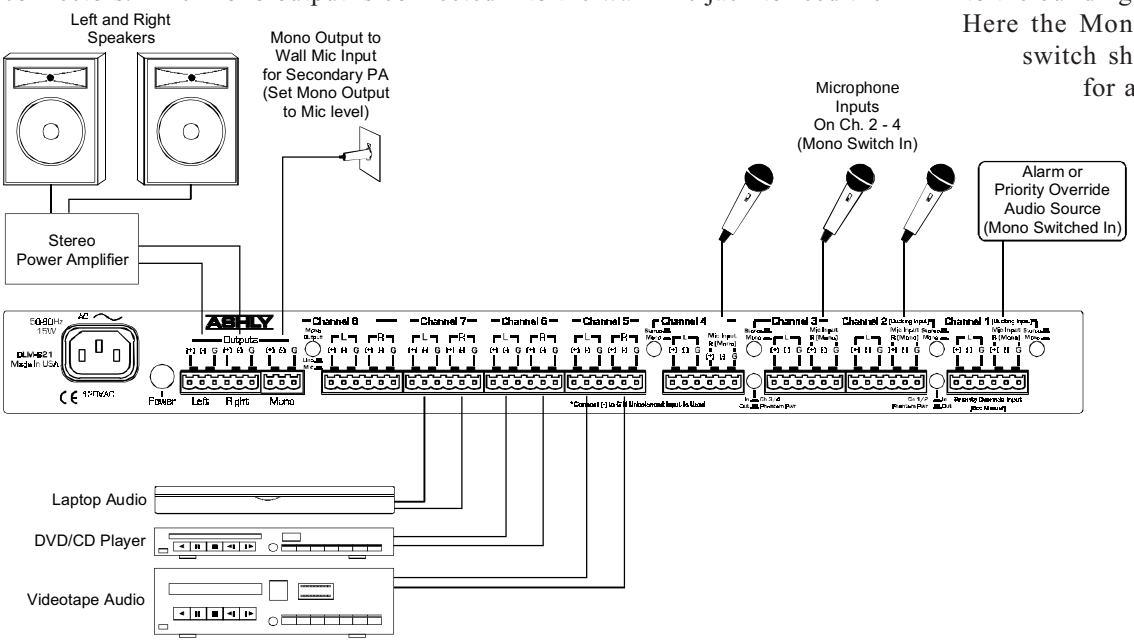

**7.3 Restaurant/Sports Bar System:**

In this application, a variety of line level audio signals (tape, CD, satellite background music and TV) are fed into line inputs five through eight. Talent mics are fed into inputs three and four. A host paging mic is fed into input 2 which will duck (attenuate) three through eight. An emergency paging mic is fed into input one and channel one priority is internally selected. An emergency page signal will then fully attenuate all other inputs. Inputs one through four should all have their Stereo/Mono switches pushed in. The Mono output is fed into an existing mic mixer/PA amplifier. The Mono output Mic/Line switch should be pushed in to give a mic-level output to this existing mic mixer.

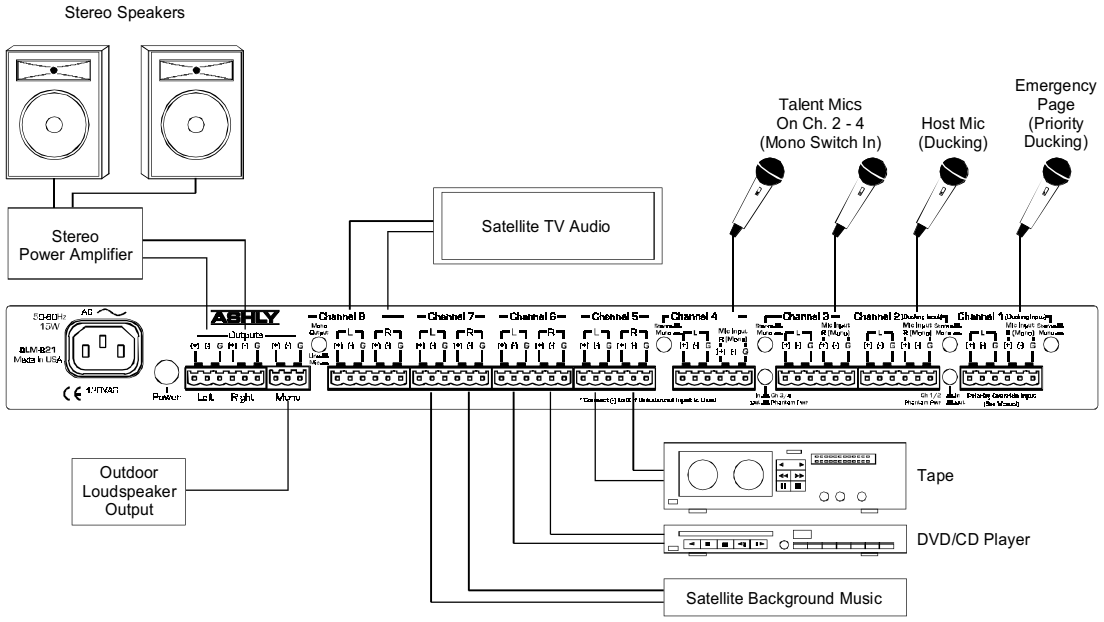


## 8. TROUBLESHOOTING TIPS

### 8.1 No Sound

Check the AC power. Is the power switch on and illuminated? Check the level meters. If they are operating, the problem between the mixer and the later components in the system. If not, check to see you really have an input signal and that it is on the desired channel. Check that you have the master gain controls at the desired operating level.

### 8.2 Distorted Sound

Something is being overdriven in the signal path. If the clip indicators are active, reduce the channel level controls. If the clip indicators are still active, reduce the input signal level. If the level meters are constantly in the red, reduce the Master gain and increase the gain of components following the mixer. There are many gain adjustments in the mixer itself and probably several others in other system components which makes it possible to overdrive an input section and then incorrectly try to reduce the gain of the output section. The best way to approach setting gains is to establish the operating level of input stages first by setting their gain as high as possible but leaving about 20dB of headroom for loud peaks, then move on to set the master gain to produce a good meter reading. Proceed to set the gain of equalizers, limiters, crossovers, and amplifiers following the mixer in the same manner, always working toward the later stages of the system.

### 8.3 Excessive Noise

If the noise is in the form of hiss, the problem is usually due to an input stage set up for low gain and then compensating by increasing the master gain. Turn up the channel level controls and reduce the master gain.

### 8.4 Excessive hum

This is usually caused by "ground loops" in the system wiring. A complex sound system with many sources separated by significant distance and using several power outlets has many opportunities for this problem to occur. If possible, feed everything in the system from one power source with a common ground.

If you need help, get in touch with your Ashly dealer or call an Ashly technical service representative at 1-800-828-6308.

## 9. DIMENSIONS

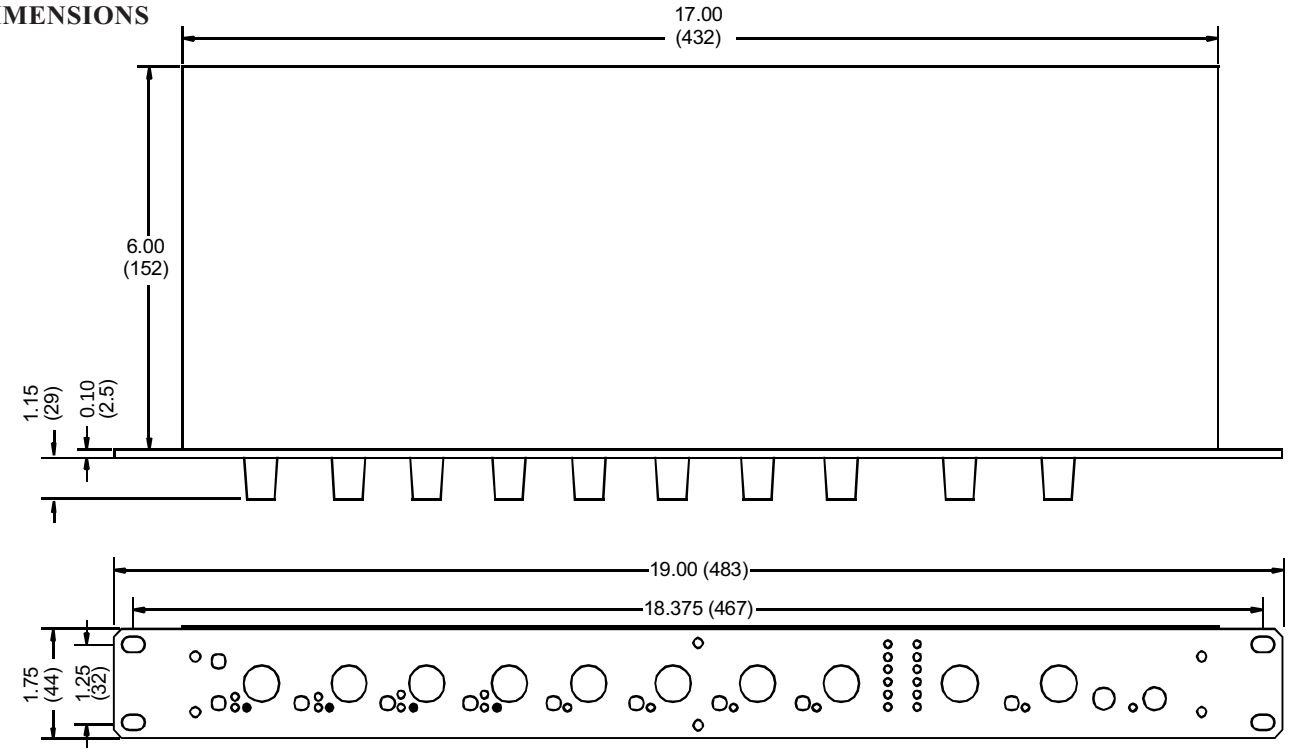


*Figure 9.1: Dimensional Drawing for DLM-821 Ducking Mic/Line Mixer in Inches (mm)*

## 10. SPECIFICATIONS

**DISTORTION**
THD at +20 dBu, 20Hz-20KHz ..... <0.05%

**HUM & NOISE (20Hz-20KHz)**
residual output noise, all levels at minimum <-100dBu
MASTER OUT, MASTER LEVEL and one
INPUT LEVEL at nominal (unity gain) ..... <-83dBu

**FREQUENCY RESPONSE**
20Hz-20KHz ..... ±0.2dB

**SIGNAL LEVELS**
Maximum input level ..... +23dBu
Maximum output level ..... +23dBu

**VOLTAGE GAIN** (dB±1)
INPUTS
MASTER OUTPUTS (levels at nominal) ..... 0dB
INPUT to MASTER OUTPUT (levels at max) ... 25dB
Ch.1 - 4 INPUT in MIC position to
MASTER OUTPUTS ..... 56dB

**DUCKER**
Ch. 1-2 ducking threshold (mic) ..... -60dBu
Ch. 1-2 ducking threshold (line) ..... -30dBu
Ch. 3-8 default ducking level .....-20dB
Ch. 3-8 optional ducking level .....-90dB

**CROSSTALK**
adjacent inputs or input to output at 1KHz .... <-80dB
adjacent inputs or input to output at 20KHz .. <-60dB

**VU METERS**
Two 5-segment LED meters. ..... 0VU=+4dBu

**PEAK INDICATORS**
activated when internal signal is 3dB below clipping

**PHANTOM POWER**
Phantom power voltage ..... +18V

**SHIPPING WEIGHT**
10 lb (4.5kg)

**NET WEIGHT**
7.2 lb (3.3kg)

**POWER REQUIREMENTS**
98 VAC - 125 VAC, 50-60 Hz,
15 watts (240 VAC available)

*unless otherwise stated, specification conditions are: 150 ohm source, all levels set at nominal, outputs into 2.7k ohm or greater.

**11. WARRANTY INFORMATION**

Thank you for your expression of confidence in Ashly products. The unit you have just purchased is protected by a five-year warranty. To establish the warranty, be sure to fill out and mail the warranty card attached to your product. Fill out the information below for your records.

Model Number _____

Serial Number _____

Dealer _____

Date of Purchase _____

Dealer's Address _____

_____

_____

Dealer's Phone _____

Salesperson _____

## 12. DLM-821 SCHEMATIC DIAGRAMS

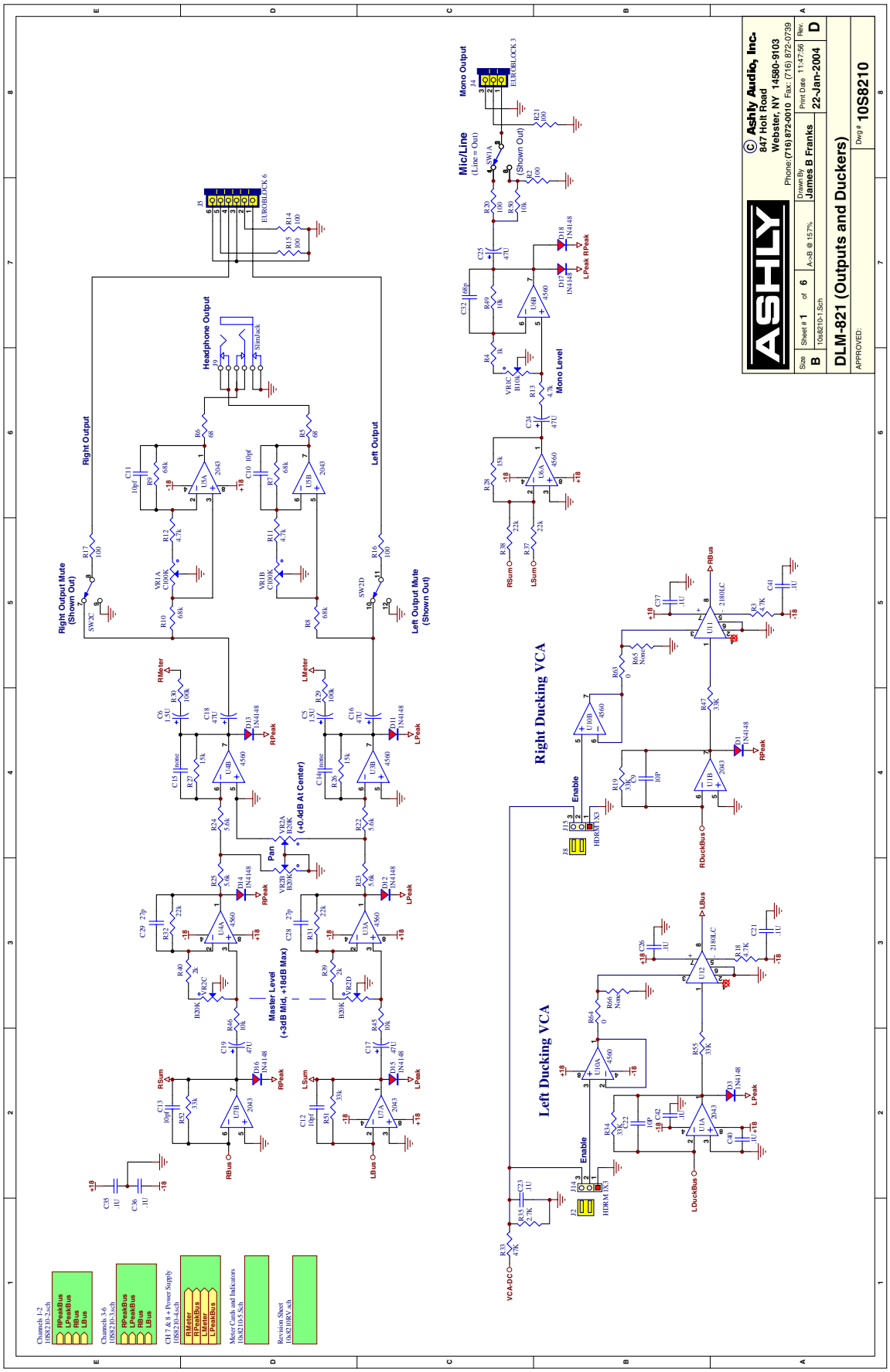

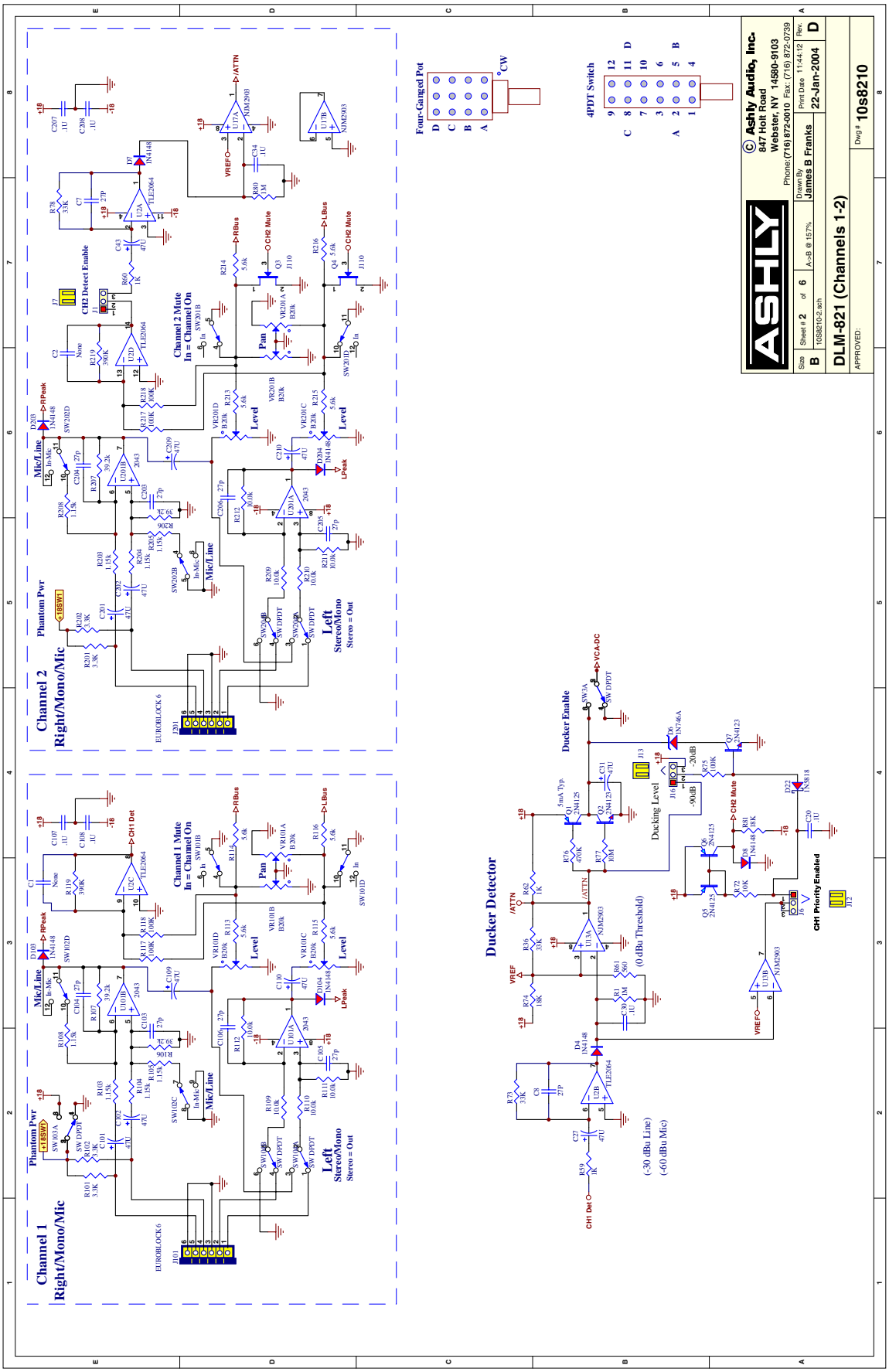
Channel 1
Right/Mono/Mic
Channel 2
Right/Mono/Mic
Ducker Detector
Ducker Enable
Ducking Level
Four-Ganged Pot
4PDT Switch
Phantom Pwr
Mic/Line
Channel 1 Mute
In = Channel On
Channel 2 Mute
In = Channel On
Pan
Level
Left
Stereo/Mono
Stereo = Out
CH2 Detect Enable
CH1 Priority Enabled
(0 dBu Threshold)
(-30 dBu Line)
(-60 dBu Mic)
EUROBLOCK 6
ASHLY
© Ashly Audio, Inc.
847 Holt Road
Webster, NY 14580-9103
Phone: (716) 872-0010 Fax: (716) 872-0739
Drawn By James B Franks
Print Date 11:44:12 22-Jan-2004
Size B
Sheet # 2 of 6
10S8210-2.sch
A->B @ 157%
Rev. D
DLM-821 (Channels 1-2)
APPROVED:
Dwg # 10s8210



ASHLY

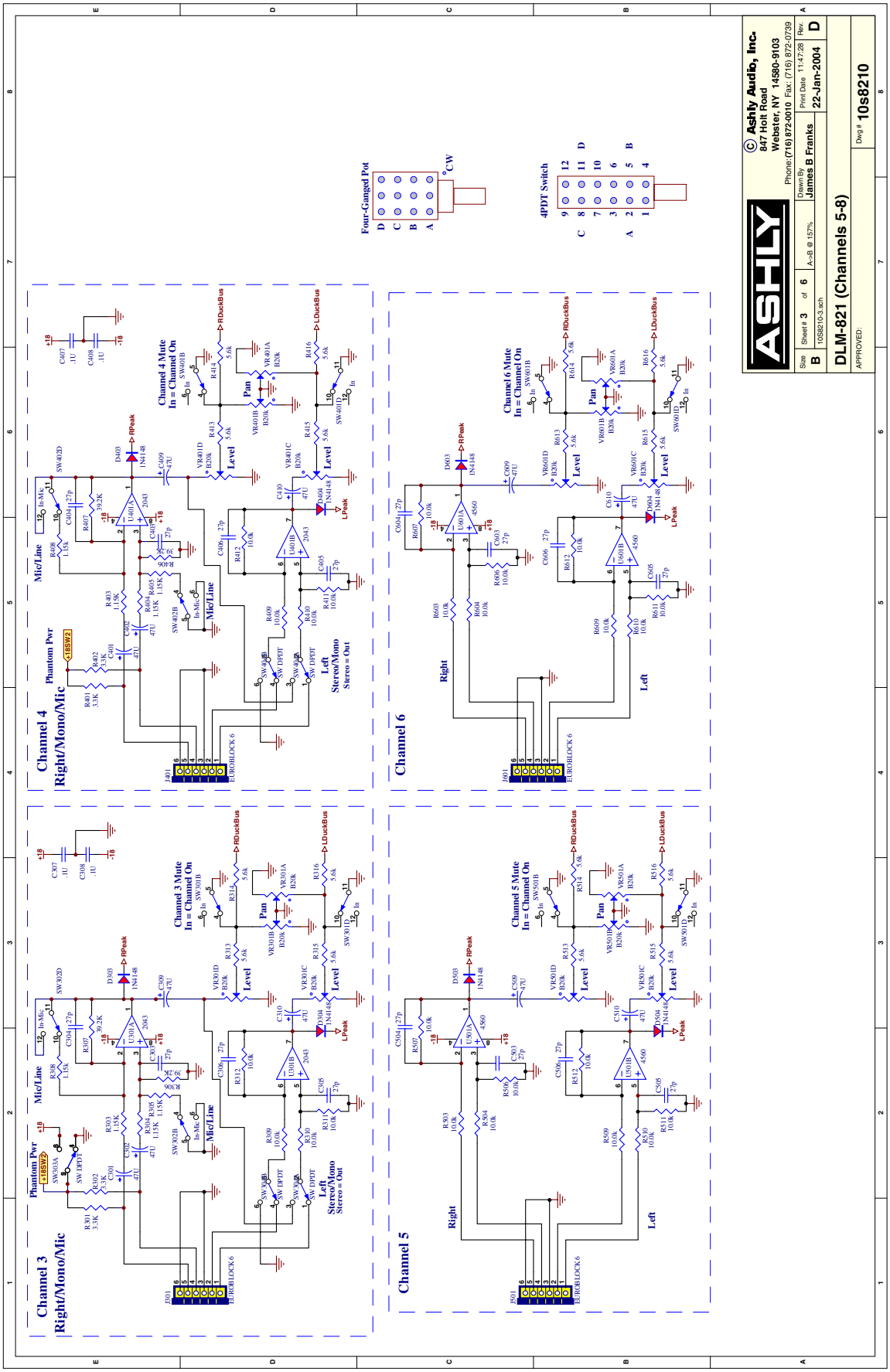
Channel 3
Right/Mono/Mic
Channel 4
Right/Mono/Mic
Channel 5
Channel 6
Phantom Pwr
Mic/Line
Channel 3 Mute
In = Channel On
Channel 4 Mute
In = Channel On
Channel 5 Mute
In = Channel On
Channel 6 Mute
In = Channel On
Pan
Level
Left
Stereo/Mono
Stereo = Out
Right
Left
RPeak
LPeak
RDuckBus
LDuckBus
EUROBLOCK 6
Four-Ganged Pot
4PDT Switch
ASHLY
© Ashly Audio, Inc.
847 Holt Road
Webster, NY 14580-9103
Phone:(716) 872-0010 Fax: (716) 872-0739
Size B
Sheet # 3 of 6
10S8210-3.sch
A->B @ 157%
Drawn By James B Franks
Print Date 11:47:28
22-Jan-2004
Rev. D
DLM-821 (Channels 5-8)
APPROVED:
Dwg # 10s8210

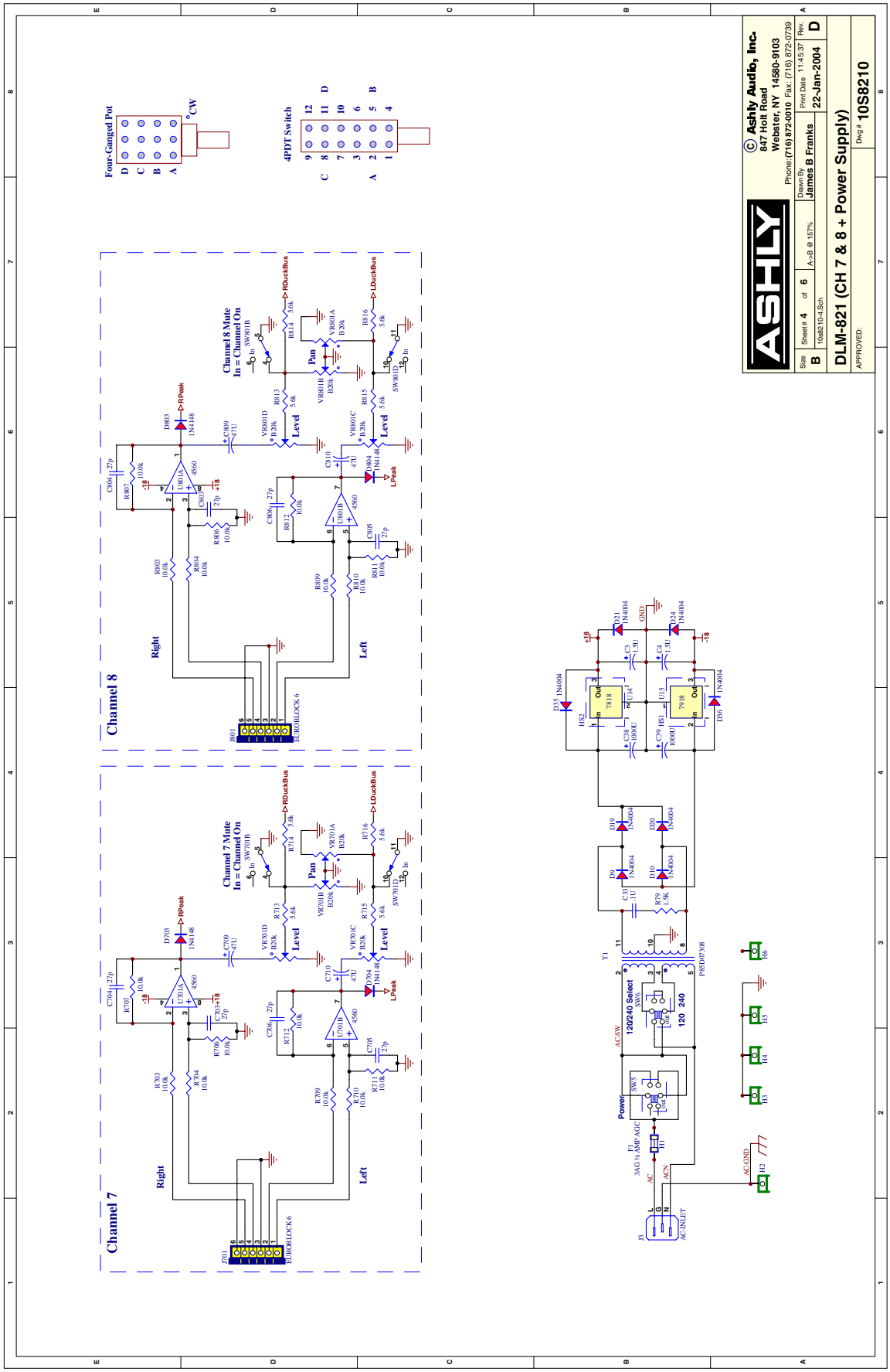
Four-Ganged Pot
4PDT Switch
Channel 8
Channel 7
Channel 8 Mute
In = Channel On
Channel 7 Mute
In = Channel On
Right
Left
Level
Pan
RPeak
LPeak
RDuckBus
LDuckBus
EUROBLOCK 6
Power
120/240 Select
3AG ½ AMP AGC
AC-INLET
AC-GND
ASHLY
© Ashly Audio, Inc.
847 Holt Road
Webster, NY 14580-9103
Phone:(716) 872-0010 Fax: (716) 872-0739
Size B
Sheet # 4 of 6
10s8210-4.Sch
A->B @ 157%
Drawn By James B Franks
Print Date 11:45:37
22-Jan-2004
Rev. D
DLM-821 (CH 7 & 8 + Power Supply)
APPROVED:
Dwg # 10S8210

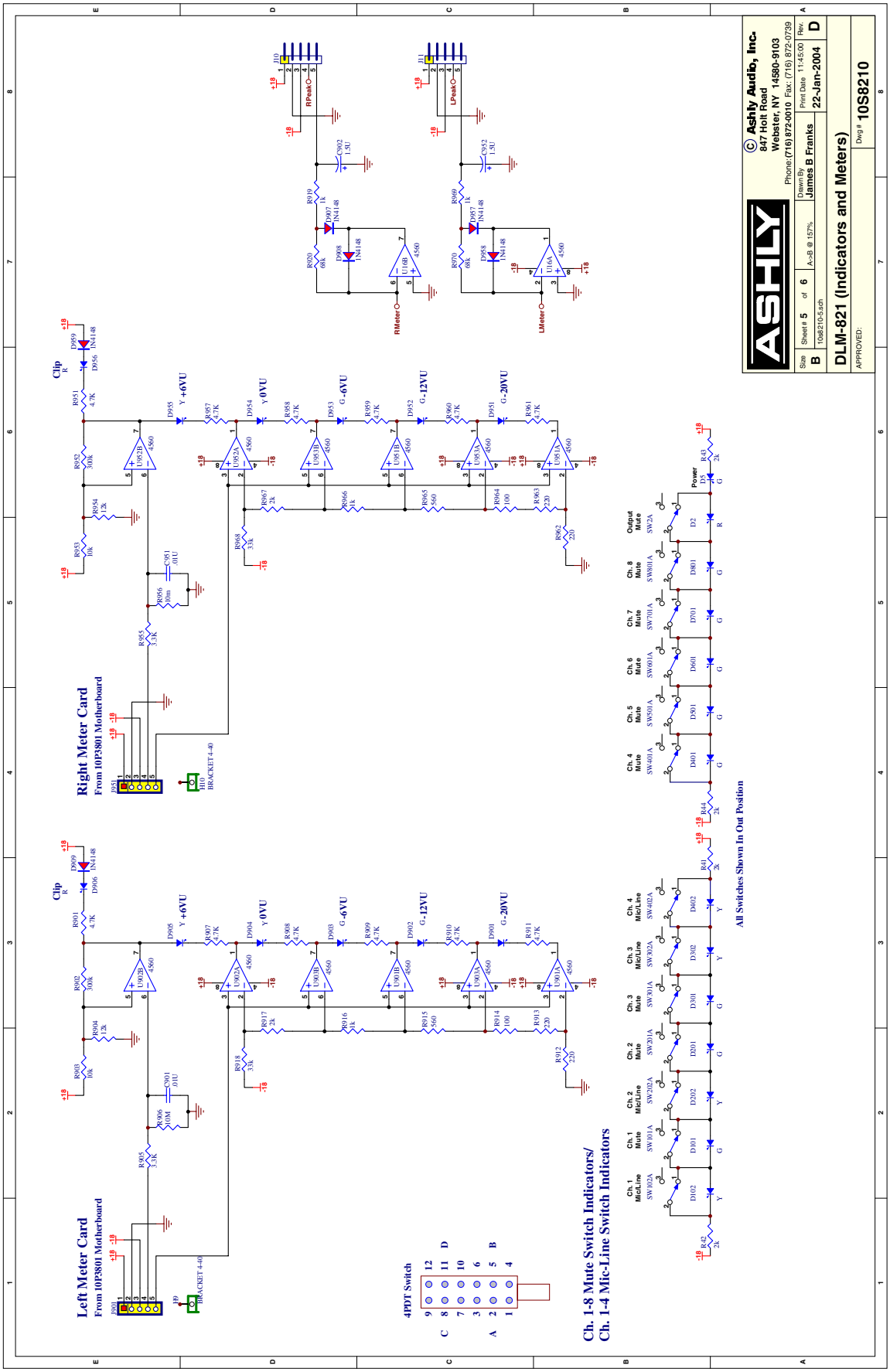
Left Meter Card
From 10P3801 Motherboard
Right Meter Card
From 10P3801 Motherboard
Ch. 1-8 Mute Switch Indicators/
Ch. 1-4 Mic-Line Switch Indicators
4PDT Switch
All Switches Shown In Out Position
RPeak
LPeak
RMeter
LMeter
BRACKET 4-40
Y +6VU
Y 0VU
G -6VU
G -12VU
G -20VU
Clip
Power
Ch. 1 Mic/Line
Ch. 1 Mute
Ch. 2 Mic/Line
Ch. 2 Mute
Ch. 3 Mute
Ch. 3 Mic/Line
Ch. 4 Mic/Line
Ch. 4 Mute
Ch. 5 Mute
Ch. 6 Mute
Ch. 7 Mute
Ch. 8 Mute
Output Mute
© Ashly Audio, Inc.
847 Holt Road
Webster, NY 14580-9103
Phone:(716) 872-0010 Fax: (716) 872-0739
Size B
Sheet # 5 of 6
10s8210-5.sch
A->B @ 157%
Drawn By James B Franks
Print Date 11:45:00
22-Jan-2004
Rev. D
DLM-821 (Indicators and Meters)
APPROVED:
Dwg # 10S8210

ASHLY AUDIO INC. 847 Holt Road Webster, NY 14580-9103
Phone: (585) 872-0010 Fax: (585) 872-0739
Toll Free (800) 828-6308
www.ashly.com

© 2004 by Ashly Audio Corporation. All rights reserved worldwide.

Printed in USA 3-04